<u>Progress Tests - Maths</u>

Structure and recommended timings:

Paper 1: Pure maths [80 marks] *(2 hours)*
Paper 2: Mechanics [40 marks], Statistics [40 marks] *(2 hours)*

Approximate grade boundaries for this paper	**Percentage**
A*	65%
A	55%
B	45%

Paper 1: Pure maths [80 marks; aim to spend two hours on this paper]

Question 1: 6 marks

a. Use proof by exhaustion to show that no square number ends in the digit 3.

[3 marks]

b. The n-th term of an integer sequence u is given by

$$u_n = 1! + 2! + 3! + 4! + \ldots + (n - 1)! + n! \qquad \text{for } n \in \mathbb{N} : n \geq 1.$$

Explain why u_n can never be a square number when $n \geq 4$.

Use the result in part a) to help you. [3 marks]

Question 2: 9 marks

a. Express $\frac{t^4+1}{t^2-1}$ as the simplest sum of a polynomial and partial fractions.

[4 marks]

b. Show that for all real x and y,

$$(\cos x + \cos y)^2 + (\sin x - \sin y)^2 = 4\cos^2 \frac{x+y}{2} \quad .$$

[5 marks]

Question 3: 18 marks

a. Show that

$$y = \sin^{-1} x \quad \Rightarrow \quad \frac{\mathrm{d}y}{\mathrm{d}x} = \frac{1}{\sqrt{1-x^2}}$$

[5 marks]

b. For some constant a, let

$$f(x) = x\sqrt{a^2 - x^2} + a^2 \sin^{-1} \frac{x}{a}\ , \qquad |x| \leq a,\ a \in \mathbb{R}$$

i) Find the derivative of $f(x)$ with respect to x. [6 marks]

ii) The diagram shows a semicircle of radius a centred at the origin.

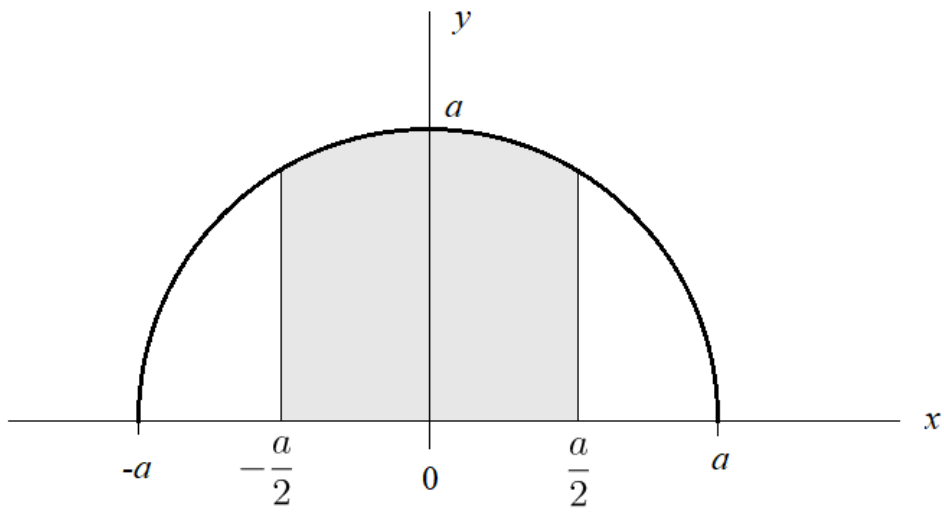

By considering your answer to part b.i), show that the area of the shaded region is $f(\frac{a}{2})$. [4 marks]

iii) Find the proportion of the semicircle area which is shaded. Give your answer in exact form in terms of π and $\sqrt{3}$.

[3 marks]

Question 4: 22 marks

For all real x, define the function

$$f(x) = \frac{1}{2} \ln \frac{1 + \sin x}{1 - \sin x}.$$

a. Consider the set S of all x such that $f(x)$ is undefined.

Write down all elements in the set $\{ x \in S : |x| \leq 2\pi \}$. [3 marks]

b. By dividing the top and the bottom of the argument to the natural logarithm in $f(x)$ by a suitable trigonometric function, show that a simplified form of $f(x)$ is

$$f(x) = \ln |\sec x + \tan x|.$$

[6 marks]

c. Consider the function $g(x) = (1 - \sin x) f(x)$.

i) Using the form in part b), show that $f'(x) = \sec x$. [3 marks]

ii) Show that when x is small,

$$g'\left(x + \frac{\pi}{2}\right) \approx -\frac{1}{2}x + x \ln\left|\frac{2}{x}\right|.$$

[9 marks]

iii) Explain why the graph of $g(x)$ does **not** have a stationary point at $x = \frac{\pi}{2}$ despite its derivative approaching zero there.

[1 mark]

Question 5: 25 marks

A pendulum consists of a mass attached to one end of a light inextensible string of length L. The other end is fixed to a frictionless pivot. The mass is lifted through an initial angle of θ_0 to the vertical. It is released from rest at time t = 0.

The subsequent motion of the pendulum is described by the differential equation

$$\frac{\mathrm{d}^2\theta}{\mathrm{d}t^2} + \frac{g}{L}\sin\theta = 0 \qquad \textit{(Equation 1)}$$

where θ is the angle between the string and the vertical. This model does **not** assume that θ_0 is small, but does assume the motion of the pendulum is periodic (neglects air resistance and other damping effects.)

a. By multiplying both sides of *Equation 1* by $\frac{d\theta}{dt}$, show that the value of

$$\frac{1}{2}\left(\frac{\mathrm{d}\theta}{\mathrm{d}t}\right)^2 - \frac{g}{L}\cos\theta$$

is constant throughout the motion of the pendulum. [4 marks]

_____

_____

_____

_____

_____

_____

b. Hence, by considering the initial conditions of the pendulum, show that the first-order differential equation modelling the motion for all $t > 0$ is

$$\left(\frac{\mathrm{d}\theta}{\mathrm{d}t}\right)^2 = \frac{2g}{L}\left(\cos\theta - \cos\theta_0\right)$$

(Equation 2)

[2 marks]

c. The time period of the pendulum can be calculated using *Equation 2* (above) and the modelling assumptions given.

Starting from *Equation 2*, use separation of variables followed by a suitable trigonometric identity and the substitution

$$\sin\frac{\theta}{2} = \sin\frac{\theta_0}{2}\sin x$$

to show that the time period for one full oscillation, *T*, of the pendulum is given by

$$T = 4\sqrt{\frac{L}{g}} \times \int_0^{\frac{1}{2}\pi} \frac{1}{\sqrt{1 - \sin^2\left(\frac{1}{2}\theta_0\right)\sin^2 x}}\,\mathrm{d}x$$

.

[12 marks]

You are advised to plan your approach before beginning. You are **not** required to justify rejecting negative solutions when square-rooting *Equation 2*.

d. A particular pendulum has a length of 0.500 m and is released from an initial angle of 60° to the vertical.

The equation for the time period from part c) has been repeated here to help you.

$$T = 4\sqrt{\frac{L}{g}} \times \int_0^{\frac{1}{2}\pi} \frac{1}{\sqrt{1 - \sin^2\left(\frac{1}{2}\theta_0\right)\sin^2 x}}\,\mathrm{d}x$$

i) Using the trapezium rule, estimate the time period of this pendulum.

You should use 4 strips of equal width and take g = 9.81 ms^{-2}. Give your answer to the greatest possible degree of precision.

[4 marks]

ii) Using a calculator with a numerical integration function, write down the exact value of the time period. Comment on your result and suggest a reason for the accuracy of your answer.

[3 marks]

End of Paper 1 (Pure Maths)

Paper 2: Applied Maths [80 marks; aim to spend two hours on this paper]

Question 6: 6 marks

The diagram shows a balanced crane being used on a building site. The forces acting on the crane are labelled at the positions shown, and point P is the pivot.

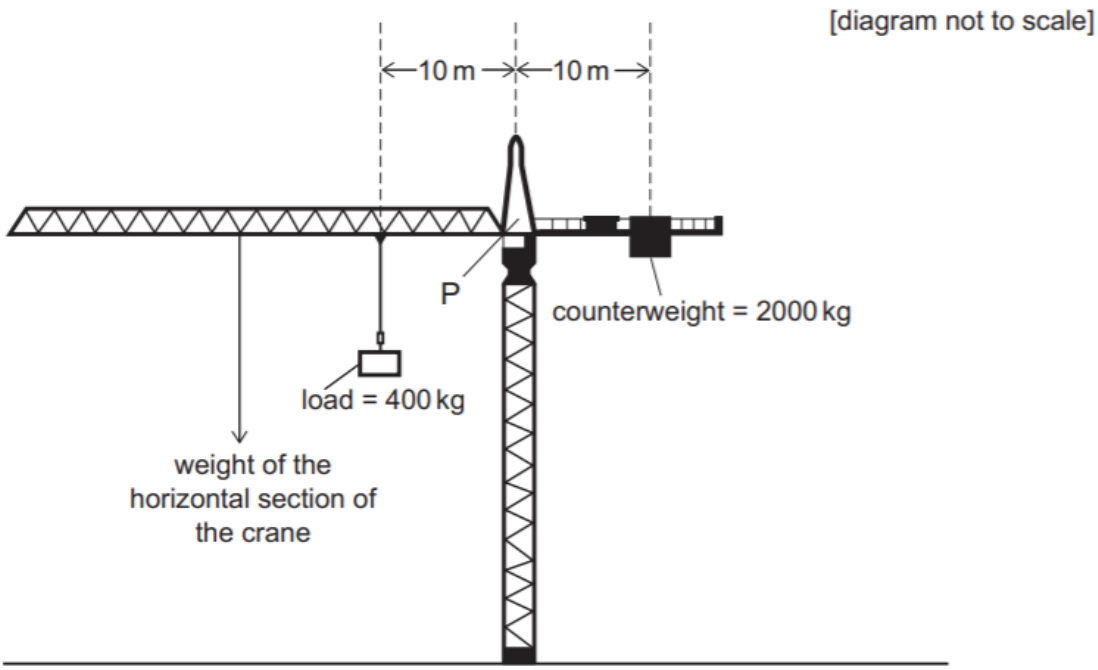

a. The length of the horizontal section of the crane is 40 m and its weight is uniformly distributed along its length.

The weight of the section to the right of P is negligible.

Calculate the mass of the horizontal section of the crane.

[3 marks]

_____

_____

_____

_____

b. The load is now moved to the left by x metres. To remain balanced about P, the crane's counterweight moves to the right by y metres.

Show that $x : y = 5 : 1$.

Assume both weights move along the crane's length. [3 marks]

_____

_____

_____

_____

_____

Question 7: 17 marks

The speed-time graph of a hovercraft's journey is shown below.

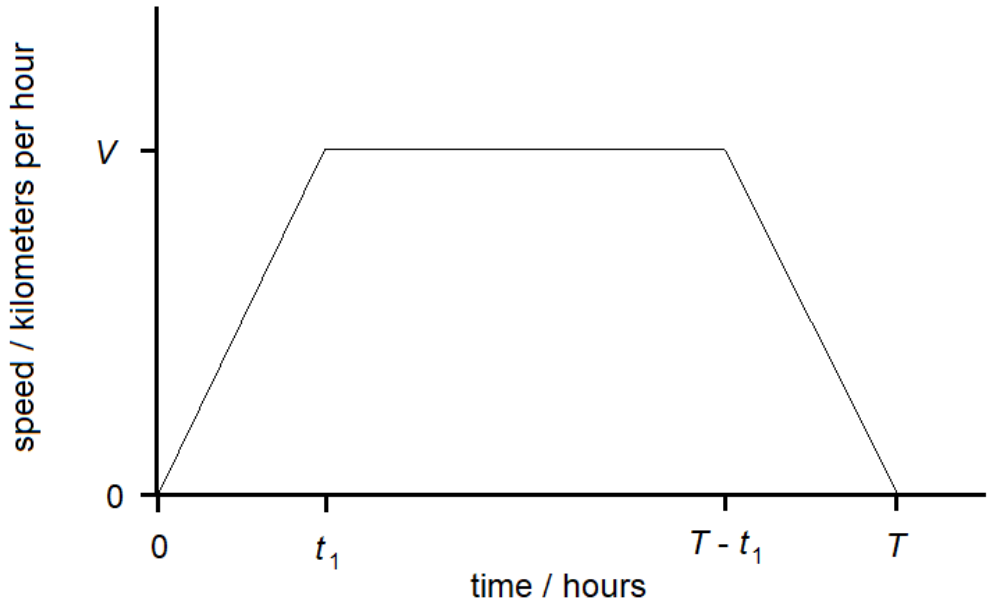

Starting from time $t = 0$, the hovercraft accelerates uniformly at m km hr^{-2} for an initial period t_1. It then travels at a constant speed V km hr^{-1}, and finally decelerates uniformly at m km hr^{-2} for the same period.

The distance travelled by the hovercraft in its journey is D km, and the total time taken is T hours.

a. If the time taken by acceleration and deceleration is $\frac{T}{6}$ in each case, find an equation for D in terms of T and m. [5 marks]

_____

_____

_____

_____

_____

b. The hovercraft is running behind schedule and needs to reduce T to $\frac{7}{9}T$.

The only way of achieving this is to increase the value of V while the acceleration and deceleration may not be changed from m.

i) Calculate the time, as a fraction of T, that should now be spent accelerating.

[9 marks]

ii) Find the smallest percentage by which V must increase to achieve the time specified in part b.i).

[3 marks]

Question 8: 17 marks

A stunt cyclist is preparing a new trick. The track on which he will perform the trick is shown below. Most of the track is sloped at an angle θ to the horizontal.

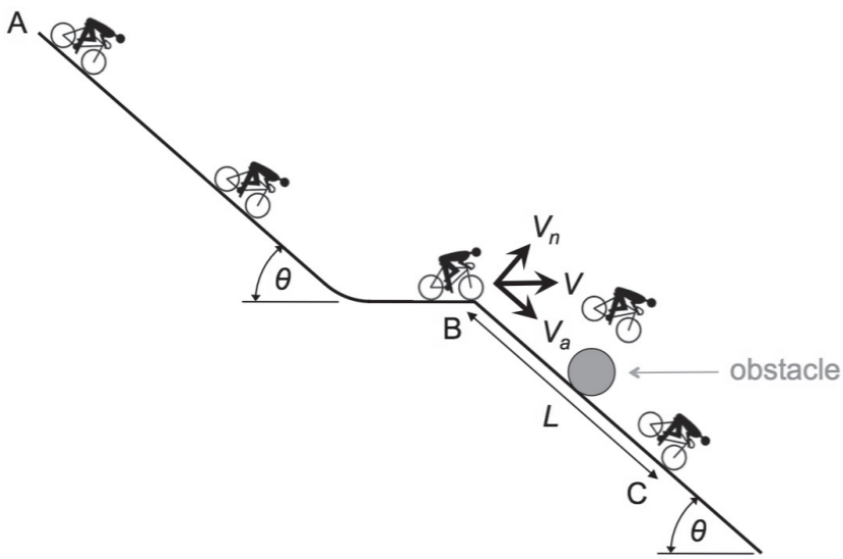

The cyclist starts riding from rest at **A**. The cyclist pedals down the slope and leaves the track at **B**, travelling horizontally initially. He lands on the track at **C**, a distance L down the slope.

Assume that frictional forces and air resistance can be neglected, and that the gravitational field strength is g.

a. The cyclist leaves the track at **B** at time t = 0 with an initial speed V. By considering components of motion perpendicular to the slope, or otherwise, show that the time taken to land at **C** is

$$\frac{2V\tan\theta}{g}.$$

[4 marks]

_____

_____

_____

b. Find L in terms of V, g and θ. Give your answer in its simplest form.

[6 marks]

c. As part of the trick, the cyclist wants to clear an obstacle placed on the slope between **B** and **C**. To give the cyclist the greatest chance of clearing the obstacle it should be placed at the point at which the cyclist's perpendicular distance from the track is the greatest.

Show that the distance from **B** at which the obstacle should be placed is

$$\frac{V^2 \sin\theta}{g}\left(1 + \frac{1}{2}\tan^2\theta\right).$$

[6 marks]

End of Mechanics; Next section is Statistics

Question 9: 6 marks

The volume of coffee, X ml, poured into a cup by a drink dispenser is thought to be a Normal variable with mean of 252 ml and a standard deviation of 2.5 ml.

A man believes the true mean of X is in fact more than 252 ml, after he used the dispenser 5 times and noticed that the mean volume of coffee in these drinks was 255 ml.

a. Stating your hypotheses clearly, test the man's claim at the 1% significance level.

[5 marks]

b. Write down the critical region for your test in part a). [1 mark]

Question 10: 14 marks

Newborn babies are tested for a mild illness which affects 1 in 500 babies. The result of a test is either positive or negative. A positive test implies the baby has the illness.

However, the test is not perfect:

- for babies with the illness, the probability of a positive result is 0.99
- for babies without the illness, the probability of a negative result is 0.95.

a. Draw a probability tree diagram to show the outcomes of the test and the illness.

[2 marks]

b. Find the probability that

i) the result is positive. [2 marks]

ii) the test gives the correct diagnosis. [2 marks]

c. i) Given that the result of a test is positive, show that the probability of the baby having the illness is less than 5%. [3 marks]

ii) Explain why the probability of the test giving a ‘true positive’ is so low, even though the accuracy of the test in each case is over 95%. [1 mark]

d. It is required to raise the reliability of the test by improving the screening process. To achieve this, it is intended to increase the probability of negative results for babies who do not have the illness from its current value of 0.95 to p.

i) Find the value of p that would raise the probability in part c.i) to 0.50. [3 marks]

ii) Suggest **one** other way to improve the reliability of the screening process. [1 mark]

Question 11: 20 marks

In a model for a neural network, there are four layers of interconnected neurons. Each neuron in one layer makes a single connection with one neuron in the next. A neuron sends a signal to all connected neurons in the next layer if it is 'activated', and does nothing otherwise.

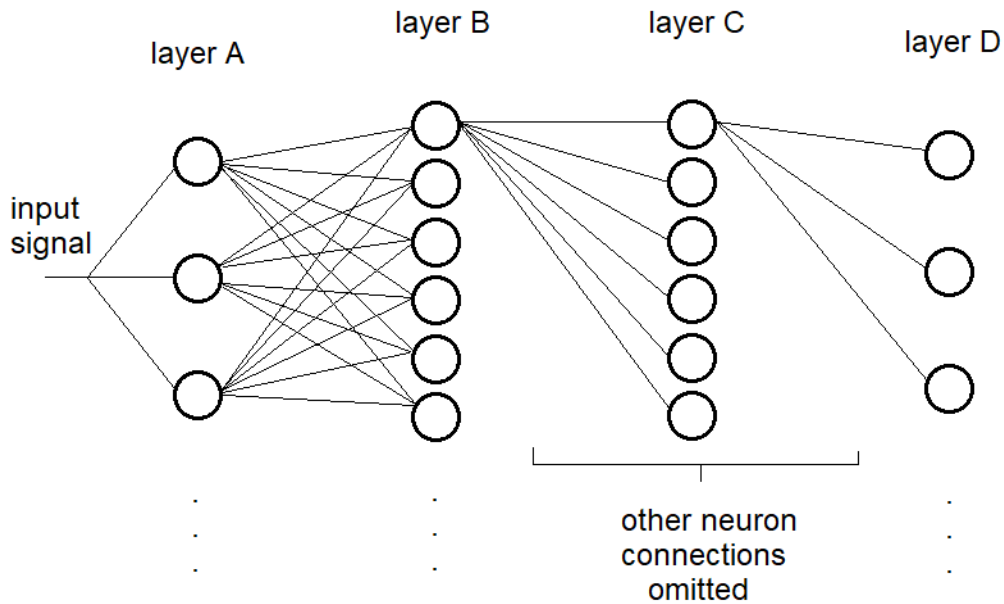

An external input signal activates **all** neurons in the layer A. It is observed that the probability of a particular neuron in layer B activating in response is $\frac{1}{5}$.

The response of the subsequent layers is modelled by choosing at random three neurons, one in each of layers B, C and D:

- The probability of a particular neuron in layer C or D activating, given that the neuron in the previous layer **did** activate, is α.

- The probability of a particular neuron in layer C or D activating, given that the neuron in the previous layer **did not** activate, is β.

a. i) Show that the probability that the chosen neuron in layer C becomes activated is

$$\frac{1}{5}(\alpha + 4\beta)$$

[3 marks]

ii) If α = 0.95 and β = 0.1, find the probability that the chosen neuron in layer D is activated.

[3 marks]

b. For every trial input signal, X is the event that neuron D activates, and Y is the event that neuron B activates.

i) Show that

$$P(X|Y) - P(X|Y') = (\alpha - \beta)^2.$$

[6 marks]

ii) Comment on the case in context when $\alpha = \beta$. [2 marks]

c. In a particular network, layers A and D each contain 10 neurons, while layers B and C each contain 1,000 neurons.

Let N_B, N_C and N_D be random variables representing the number of neurons in layers B, C and D respectively which are activated in a given trial.

i) Write down **two** different valid distributions of N_B. [3 marks]

ii) If a **small** number of trials are performed, which, if any, of the sample means $\overline{N_B}$ and $\overline{N_D}$ can be modelled by Normal distributions?

Explain your choice(s). [3 marks]

End of Paper 2 (Applied Maths)